SL 408 OUTDOOR HLE

TECHNICAL SPECIFICATIONS
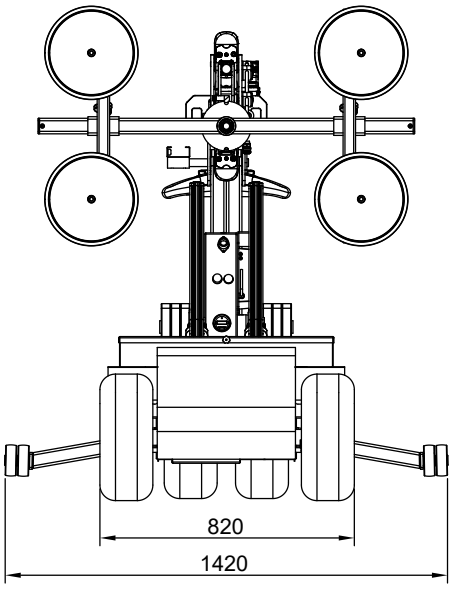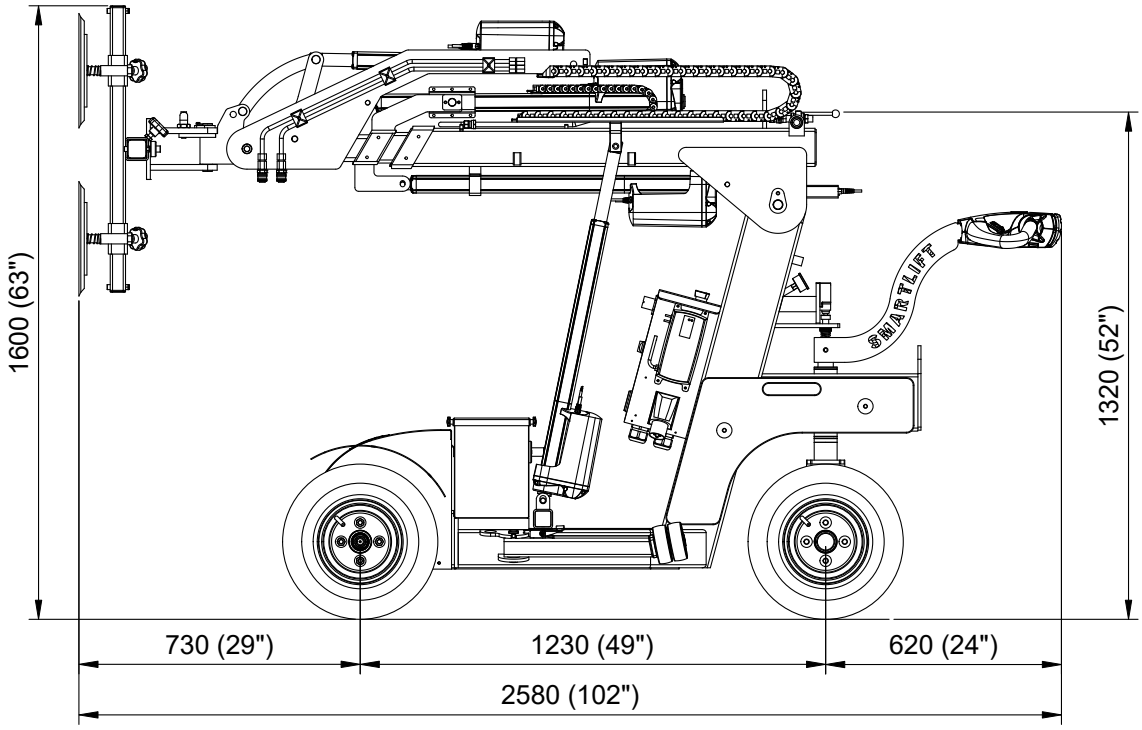
Lifting cap. arm in/out	430/100 kg - 950 /220 lbs.
Lifting height	3,700 mm/145 in.
Extension of arm	600 + 600 mm/24 + 24 in.
Tip from horizontal	45° back/90° fwd.
Side shift	100 mm/4 in.
Charging voltage	230 V/110 V
Charging time	Approx. 8 hrs.
Running period	Up to 10 hrs.
Front-wheel drive	1200 W AC
Suction pads	4 x Ø 300mm/Ø12 in.
Width	820 mm / 32 in.
Curb weight	700 kg/1,540 lbs.
Class	IP 65