

STAR 8 / 10

OPTIMAL AGILITY IN CONFINED WORKING AREAS

- Progressive electric drive AC motors
- Zero tail swing & tight turning radius
- 3m outreach vertical jib
- Minimal maintenance & downtime
- Maintenance free brushless AC motors
- Haulotte Activ'Screen (onboard diagnostic)

CENTRALIZED BATTERY FILLING

- Longer life time
- New unbreakable hoods in composite material
- Durability multiplied by 3 on pins, bushes, non-painted parts and fastening hardware
- Smart transportability
- Versatile and effective transport solutions with forklift tine pockets
- 25% gradeability to easily climb truck ramps

STAR 8 / 10

VERTICAL MASTS

TECHNICAL DATA

	STAR 8	STAR 10
Working height	8.7 m	10 m
Platform height	6.7 m	8 m
Horizontal outreach	3 m	3 m
Lift capacity - inside	200 kg (2 pers.)	200 kg (2 pers.)
Lift capacity - outside	200 kg (2 pers.)	200 kg (1 pers.)
Platform size	0.78 x 0,98 m	0.78 x 0,98 m
D Length	2.7 m	2.7 m
B Width	1 m	1 m
Tailswing	0 cm	0 cm
C Wheelbase	1.2 m	1.2 m
A Height - stowed	1.99 m	1.99 m
E Ground clearance	10 cm	10 cm
Driveable at full height up to	6.7 m	8 m
Drive speed proportional	0.6 - 5 km/h	0.6 - 5 km/h
Turning radius - outside	1.88 m	1.88 m
Turntable rotation	345°	345°
Vertical jib rotation	130° (+70°/-60°)	130° (+70°/-60°)
Tyres - non marking	16x5x10.5	16x5x10.5
Tilt alarm	3 °	3 °
Gradeability	25 %	25 %
Hydraulic system capacity	7 l	7 l
Power source	24 V - 250 Ah	24 V - 250 Ah
Weight	2 585 kg	2 677 kg

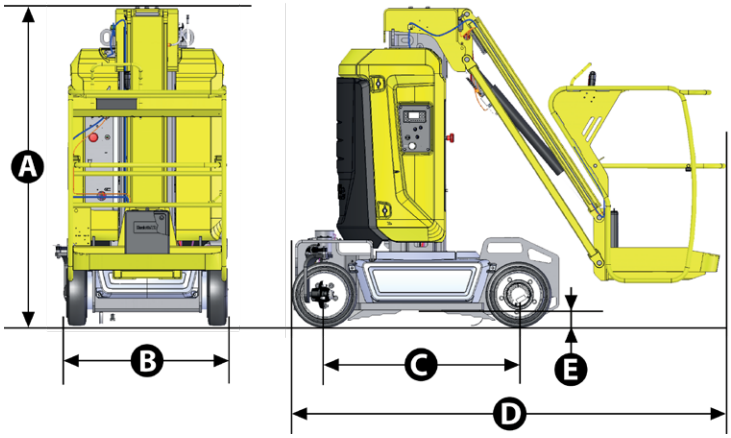

STANDARD EQUIPMENT

> 24 V electric drive brushless AC motors
> 24 V – 250 Ah traction batteries
> 35 A battery charger
> Battery charge indicator
> On-board diagnostic tool Haulotte Activ'Screen
> Centralised battery filling
> Forklift tine pockets
> Towing hooks and lifting eyes
> Passive potholes
> 2 front driving wheels
> 2 rear steering wheels
> Non-marking tires
> Brake release
> Hourmeter
> Horn
> Emergency stop buttons at cage and ground level
> Load controller in the platform
> Emergency hand pump
> 2 control stations at cage and ground level
> 2 rings in the platform for safety harnesses
> Travel alarm

OPTIONS AND ACCESSORIES

> Haulotte Activ'Shield Bar
> Power line in platform
> Air line in platform
> Swing door entry gate
> Biodegradable oil
> Maintenance-free batteries
> Telematics ready
> Hydraulic oil for cold countries
> Flashing light
> Working light

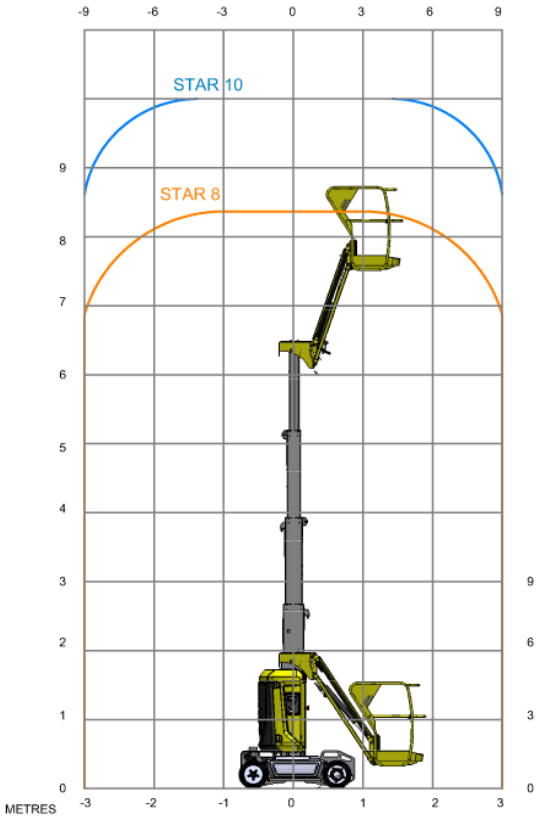

2420327190 · Non contractual document · We reserve the right to modify the technical characteristics of this document without notice · 06/2018

La Péronnière - BP 9 - 42152 l'Horme - France · Tel: +33 (0)4 77 29 24 24 · Fax: +33 (0)4 77 29 43 95
haulotte@haulotte.com · **www.haulotte.com**

Haulotte
LET'S DARE TOGETHER